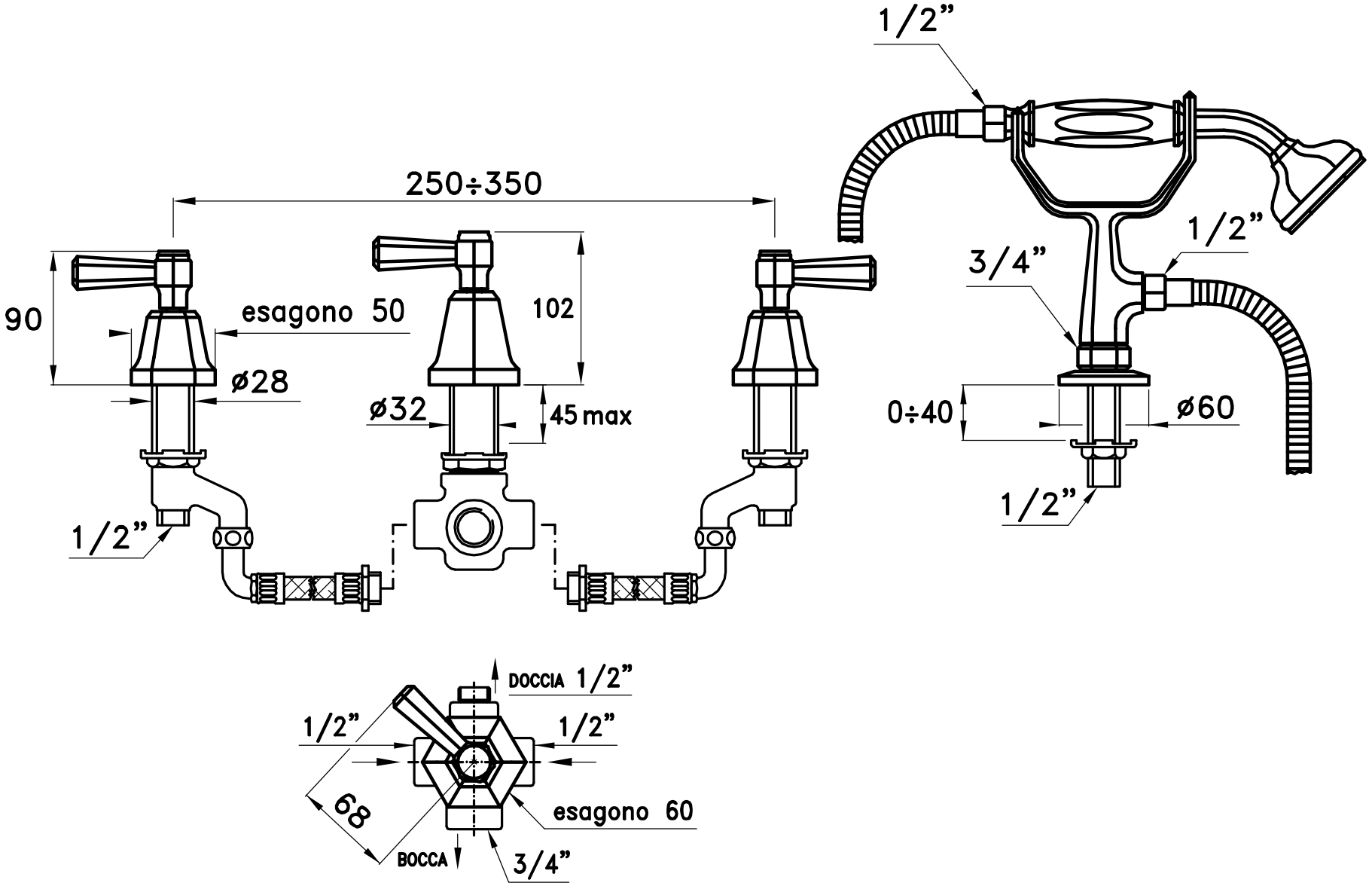

ECCELSA LEVE 3256TR2/307